13.Inhibitor Switch

A: INSPECTION

When the driving condition or starter motor operation is improper, first check the shift linkage for improper operation. If the shift linkage is functioning properly, check the inhibitor switch.
1) Disconnect the inhibitor switch connector.
2) Check continuity in inhibitor switch circuits with the select lever moved to each position.

NOTE:
- Also check that there is no continuity in ignition circuit when the select lever is in the “R”, “D”, “3”, “2” and “1” ranges.
- If the inhibitor switch does not operate, check for poor contact of the connector on transmission side.

	Range	Pin No.
Signal sent to TCM	P	4 — 3
	R	4 — 2
	N	4 — 1
	D	4 — 8
	3	4 — 7
	2	4 — 6
	1	4 — 5
Ignition circuit	P/N	12 — 11
Back-up light circuit	R	10 — 9

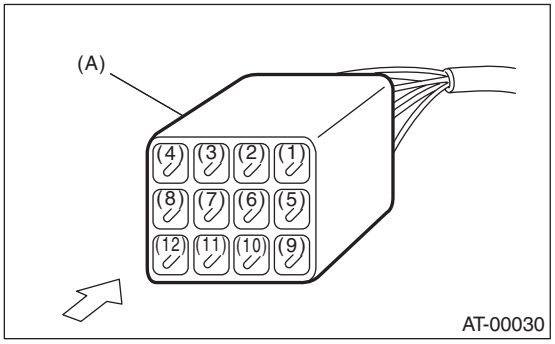

(A) Inhibitor switch connector

3) Check that there is continuity at equal points when the select lever is leaned 1.5° in both directions from the “N” range.
If there is continuity in only one direction or in other points, adjust the inhibitor switch. <Ref. to 4AT-47, ADJUSTMENT, Inhibitor Switch.>

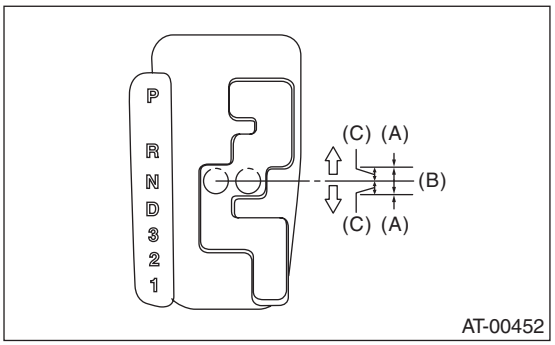

(A) Continuity does not exist.
(B) Continuity exists.
(C) 1.5°

4) Repeat the above checks. If there are abnormalities, adjust the select cable. <Ref. to CS-28, ADJUSTMENT, Select Cable.>

B: ADJUSTMENT

1) Set the select lever to “N” range.
2) Loosen the three inhibitor switch securing bolts.
3) Insert the ST as vertical as possible into the holes in the inhibitor switch lever and switch body.
ST 499267300 STOPPER PIN

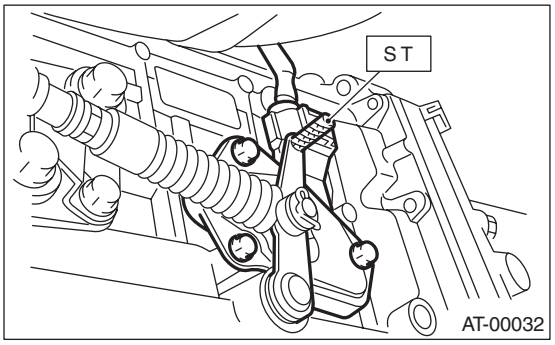

4) Tighten the three inhibitor switch bolts.

Tightening torque:
3.5 N·m (0.36 kgf-m, 2.6 ft-lb)

5) Repeat the above checks. If the inhibitor switch is determined to be “faulty”, replace it.

C: REMOVAL

1) Set the vehicle on a lift.
2) Set the select lever to “N” range.
3) Remove the air intake chamber. (Non-turbo model) <Ref. to IN(H4SO)-6, REMOVAL, Air Intake Chamber.>
4) Remove the intercooler. (Turbo model) <Ref. to IN(H4DOTC)-13, REMOVAL, Intercooler.>

5) Disconnect the inhibitor switch connector.

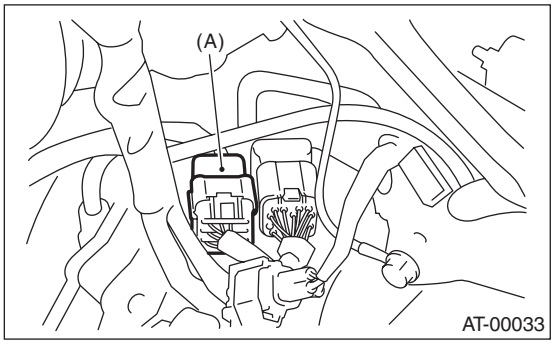

(A) Inhibitor switch

6) Remove the inhibitor switch connector from the stay.
7) Lift up the vehicle.
8) Remove the front and center exhaust pipes. <Ref. to EX(H4SO)-4, REMOVAL, Front Exhaust Pipe.> <Ref. to EX(H4DOTC)-10, REMOVAL, Center Exhaust Pipe.>
9) Remove the snap pin and washer from the range select lever.

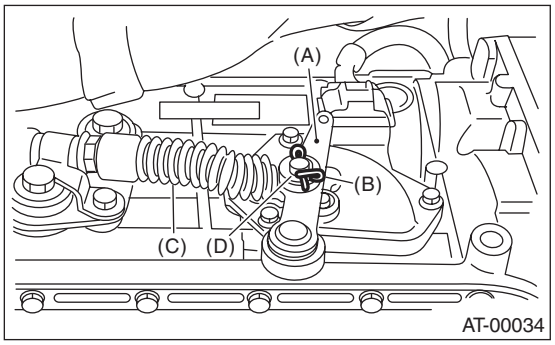

(A) Range select lever
(B) Snap pin
(C) Select cable
(D) Washer

10) Remove the plate assembly from the transmission case.

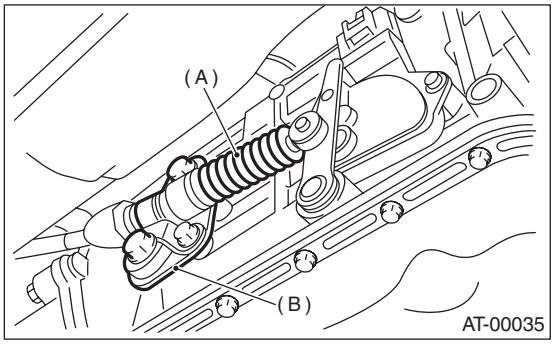

(A) Select cable
(B) Plate ASSY

11) Remove the bolt.

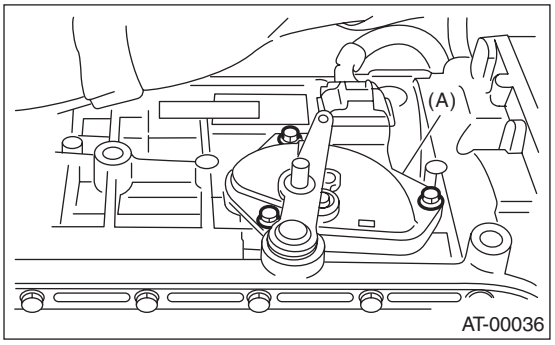

(A) Inhibitor switch

12) Move the range select lever to the parking position (left side).

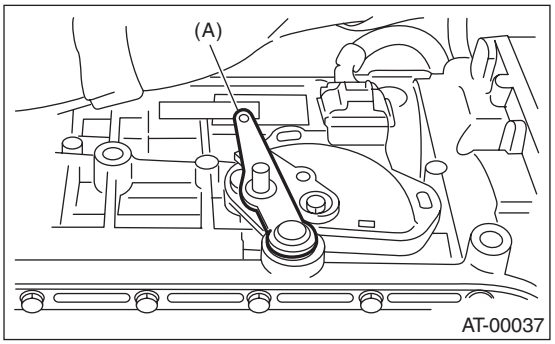

(A) Range select lever

13) Remove the inhibitor switch from the transmission.

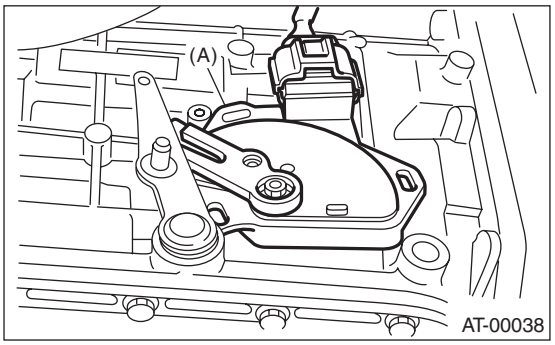

(A) Inhibitor switch

14) Disconnect the inhibitor switch harness connector from the inhibitor switch.

D: INSTALLATION

1) Connect the inhibitor switch harness connector to the inhibitor switch.
2) Install the inhibitor switch to the transmission case.

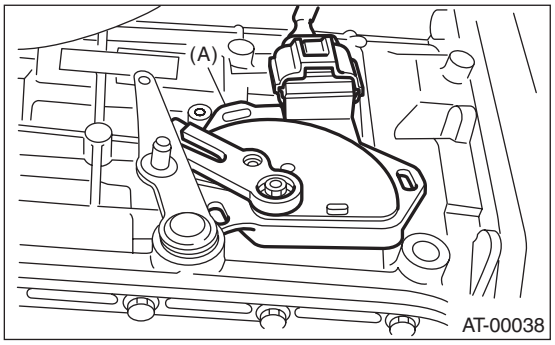

(A) Inhibitor switch

3) Move the range select lever to the neutral position.
4) Using the ST, tighten the bolts of the inhibitor switch.
ST 499267300 STOPPER PIN

Tightening torque:
3.5 N·m (0.36 kgf-m, 2.6 ft-lb)

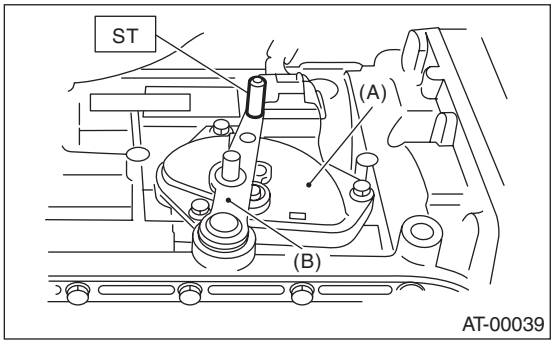

(A) Inhibitor switch
(B) Range select lever

5) Install the select cable to the range select lever.

6) Install the plate assembly to the transmission.

Tightening torque:
T: 25 N·m (2.5 kgf-m, 18.4 ft-lb)

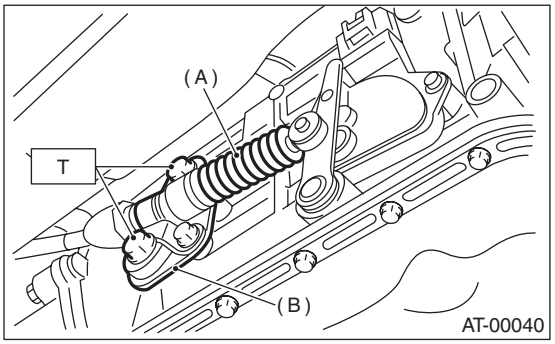

(A) Select cable
(B) Plate ASSY

7) Install the washer and snap pin to the range select lever.

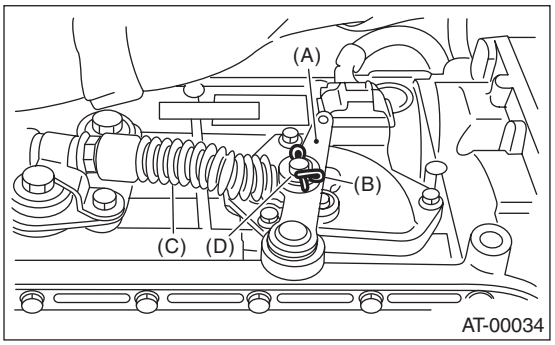

(A) Range select lever
(B) Snap ring
(C) Select cable
(D) Washer

8) Install the front and center exhaust pipe. (Non-turbo model) <Ref. to EX(H4SO)-5, INSTALLATION, Front Exhaust Pipe.>
9) Install the center exhaust pipe. (Turbo model) <Ref. to EX(H4DOTC)-11, INSTALLATION, Center Exhaust Pipe.>
10) Lower the vehicle.
11) Install the inhibitor switch connector to the stay.

12) Connect the inhibitor switch connector.

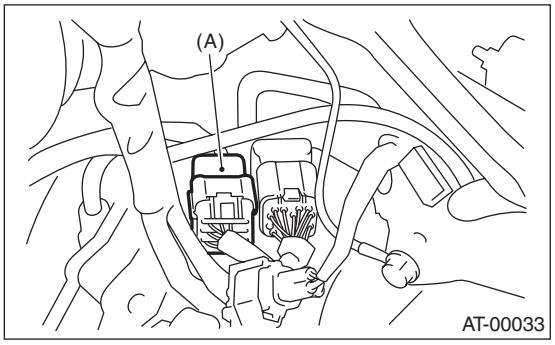

(A) Inhibitor switch

13) Install the air intake chamber. (Non-turbo model) <Ref. to IN(H4SO)-6, INSTALLATION, Air Intake Chamber.>
14) Install the intercooler. (Turbo model) <Ref. to IN(H4DOTC)-14, INSTALLATION, Intercooler.>
15) Inspect the inhibitor switch. <Ref. to 4AT-47, INSPECTION, Inhibitor Switch.>